Technical data sheet



Descriptions	Name	**121 Bath Concept**
	Line	Bath
	Description	1-part bathwall with wall profile and stabilisation bar
	Mounting possibilities	Can be combined with 125/128
	Turning direction	Not possible

Measurements	Article	Width	effective width	Height	Left/Right
	121 012 000 ###	700 mm	670 mm	1600 mm	Left/Right
	121 013 000 ###	800 mm	770 mm	1600 mm	Left/Right
	121 014 000 ###	900 mm	870 mm	1600 mm	Left/Right
	121 015 000 ###	1000 mm	970 mm	1600 mm	Left/Right
	121 099 000 ###	200 mm-1000 mm		up to 1600 mm	Left/Right
	Made to measure	Made to measure per mm (ref. 121.099.000), Width max. 1000 mm			
	Glass beveling	Not possible			

Glass				
	Glass specifications	8 mm toughened safety glass (norm NBN 23-002, klasse NBN EN 12600)		
	Type of glass	101 Transparant	107 Green	119 Opal white
		102 Opal mat	108 Blue	120 Opal Black
		104 Extra transparant	114 Crepi	125 Opal bronze
		105 Bronze	115 Cathedral	126 Opal gris
		106 Gris	118 Black	121 Mirror
	Glass treatment	109 Aquaclean		

Finishing	Characteristics	1 Wall profile
	Finishings	Shiny (011), Matte (001), White matte (088), Black matte (099)
	Stabilisation bar	Stabilisation bar at 90°, max. 1200 mm
Service	Measuring	Possible with price supplement
	Mounting	Possible with price supplement
	Mounting instructions	Available
Technical details	Advice	A profile or glass must always be placed on the tiling. Otherwise, this can lead to issues with waterproofing. When preparing, take into account the size and weight of the glass. Can the glass be brought into and installed in the bathroom.

Technical data sheet parts

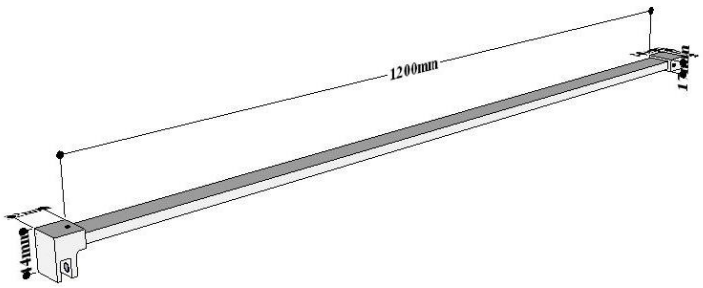

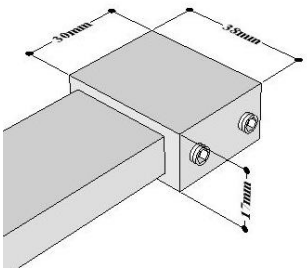

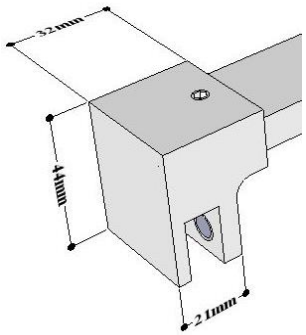

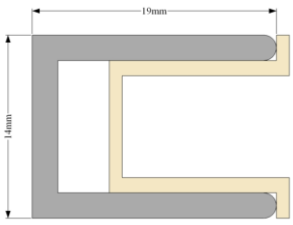

Aquaconcept
Schaarbeekstraat 34
9120 Melsele (Beveren)
België

Tel.: +32 (0)3 296 03 03
E-mail: info@aquaconcept.eu
www.aquaconcept.eu