Technische fiche

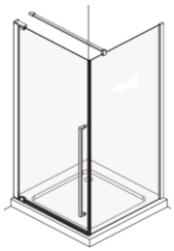

Descriptions

Name	**471 Focus Combi**
Line	Design
Descriptions	Swinging door at 90°
Mounting possibilities	Has to be combined with a 480
Turning direction	90° outwards

Measurements

Article

Stock transparent glass	Width / niche size	Height	Entry	Left/Right
471.101.000.101	800 mm / 780-810 mm	2000 mm	640 mm	Left/Right
471.102.000.101	900 mm / 880-910 mm	2000 mm	740 mm	Left/Right
471.103.000.101	1000 mm / 980-1010 mm	2000 mm	840 mm	Left/Right

Different types of glass	Width / niche size	Height	Entry	Left/Right
471 101 001 ###	800 mm / 780-810 mm	2000 mm	640 mm	Left
471 102 001 ###	900 mm / 880-910 mm	2000 mm	740 mm	Left
471 103 001 ###	1000 mm / 980-1010 mm	2000 mm	840 mm	Left
471 101 002 ###	800 mm / 780-810 mm	2000 mm	640 mm	Right
471 102 002 ###	900 mm / 880-910 mm	2000 mm	740 mm	Right
471 103 002 ###	1000 mm / 980-1010 mm	2000 mm	840 mm	Right

Custom made	Width	Height	Entry	Left/Right
471 109 001 ###	500-1000 mm	1500 - 2000 mm	Max. 840mm	Left
471 109 002 ###	500-1000 mm	1500 - 2000 mm	Max. 840mm	Right

Made to measure	made to measure per mm, max width 1000m, max height 2000mm
Glass beveling	Not possible

Glass

Glass specifications: 8 mm toughened safety glass (norm NBN 23-002, klasse NBN EN 12600)

Type of glass / Glass treatments:

101 Transparent	107 Green	118 Black	121 Mirror
102 Opal mat	108 Blue	119 Opal white	
104 Extra transparent	114 Crepi	120 Opal Black	
105 Bronze	115 Cathedral	125 Opal bronze	
106 Gris	116 Ribble	126 Opal gris	
109 Aquaclean	110 Zone intime	111 Zone à la carte	
112 Print			

Reversible: This door is reversible in Clear Transparent version 101.

Finishings

Characteristics	1 hinge profile / 1 strike profile
Finishing ###	Shiny (011), Black matte (099), White matte (088)
Stabilisation bar	Not possible

Service

Checking of measurements	Possible at an additional cost
Mounting	Possible at an additional cost
Mounting guidelines	Available

Technical details

Advice:

Adjustability 30 mm on the hinge side

A profile or glass must always be placed on the tiling.
Otherwise, this can lead to issues with waterproofing.

When preparing, take into account the size and weight of the glass.
Can the glass be brought into and installed in the bathroom.

Aquaconcept
Schaarbeekstraat 34
9120 Melsele (Beveren)
België

AQUA CONCEPT

Tel.: +32 (0)3 296 03 03
E-mail: info@aquaconcept.eu
www.aquaconcept.eu

Technical data sheets parts

471 Focus

Strike profile

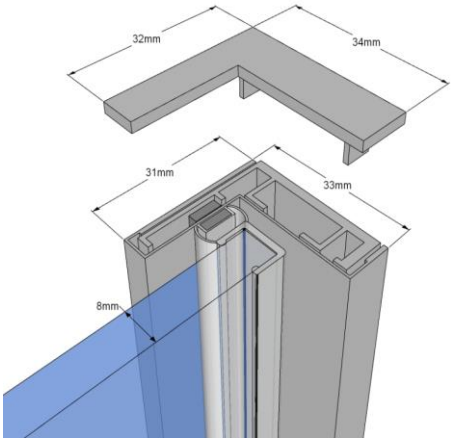

Handle

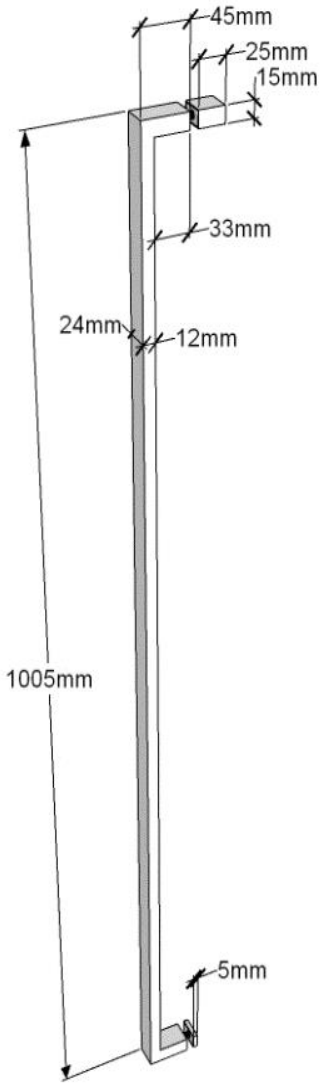

Wall profile

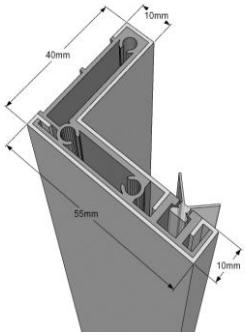

water barrier profile

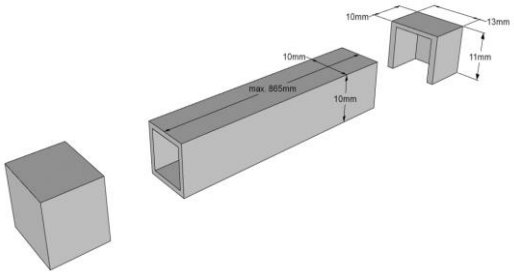

Aquaconcept
Schaarbeekstraat 34
9120 Melsele (Beveren)
België

Tel.: +32 (0)3 296 03 03
Fax: +32 (0)3 296 03 02
E-mail: info@aquaconcept.eu
www.aquaconcept.eu

Technical data sheets parts

471 Focus

Pivot point

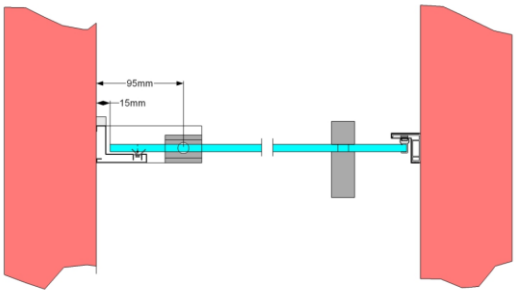

Pivot part of the glass

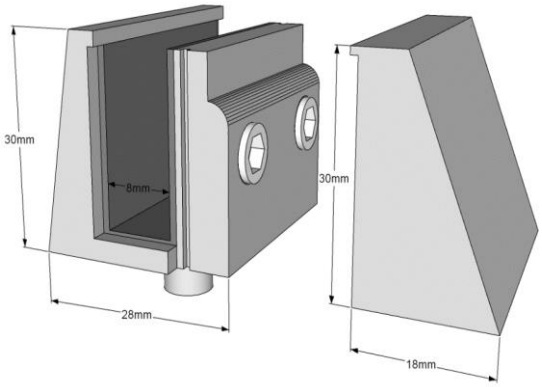

Pivot part on the ground

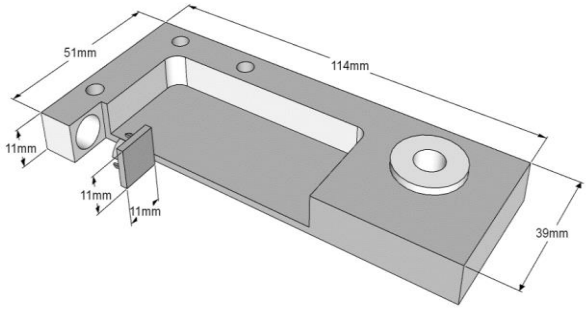

Aquaconcept
Schaarbeekstraat 34
9120 Melsele (Beveren)
België

AQUA CONCEPT

Tel: +32 (0)3 296 03 03
E-mail: info@aquaconcept.eu
www.aquaconcept.eu